C-Bus 360º PIR Occupancy Sensor

Installation Instructions

5753L

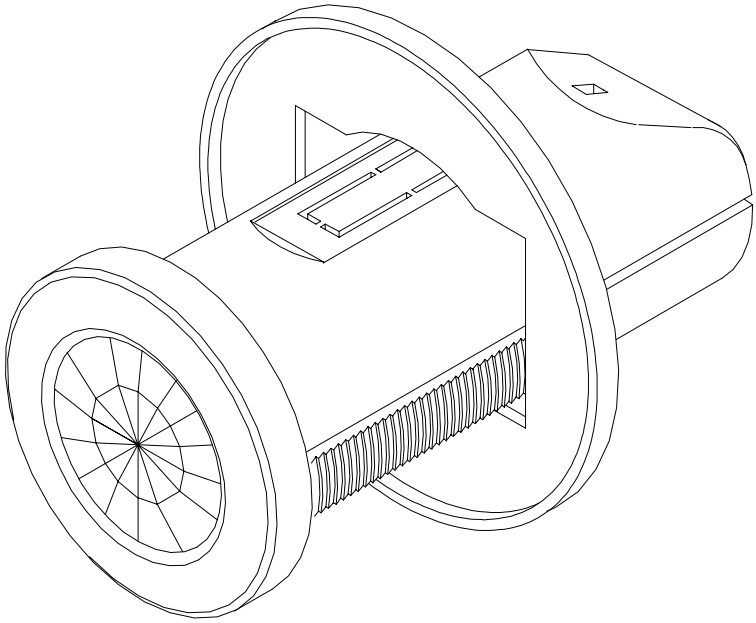

Table of Contents

1.0 Product Range

5753L C-Bus 360° PIR Occupancy Sensor

2.0 Description

The 5753L PIR Occupancy Sensor is part of the Clipsal C-Bus2 range and as such should only be connected to a Clipsal C-Bus Network. The 5753L monitors its immediate environment. Whenever it detects movement of body heat within its range, it will issue commands over the C-Bus Network to control output devices. When connected to an operating C-Bus Network, the Sensor will be able to detect any moving infrared source which moves into its “field of view”.

The 5753L, includes an ambient light sensor which is used to allow different behaviour between dark and light conditions.

The light level required to change from dark to light is adjustable on the side if the Unit and can be set from any condition from full daylight to almost complete darkness.

The “time on” adjustment is set from the C-Bus Installation Software or via its *Learn Mode* (refer section 8.1).

Note: A small plastic screwdriver is supplied for light level adjustments.

3.0 Installation Procedure

3.1 Installation Location

The 5753L is for indoor use only and is designed to flush mount on the ceiling with the best location being in the centre of the room. It has a 360 degree field of view with a minimum detection coverage of 5 metres when mounted 2.4 metres above the floor, noting that the coverage is slightly elliptical.

Typical Room Plan Example:

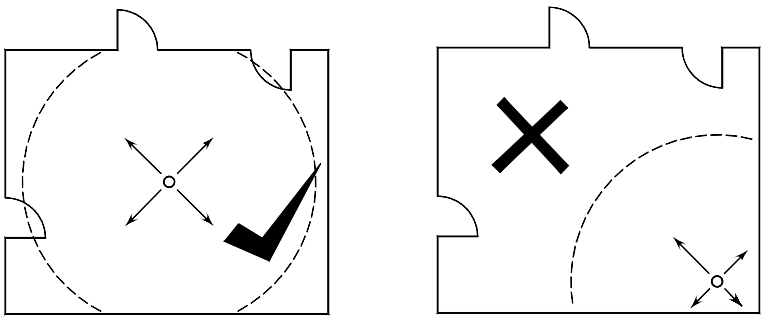

RIGHT WRONG

Note: Do not mount close to objects that can change temperatures rapidly, such as air-conditioning vents or heater flues. Avoid high humidity locations which may cause condensation on the lens.

The field of view of the Unit is shown schematically below.

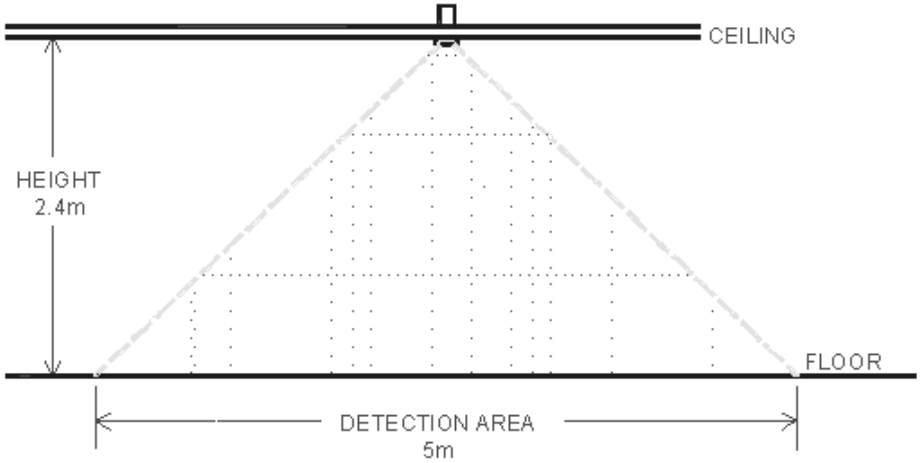

When viewed from above the detection pattern is elliptical in shape. The diagram below shows detection zone with respect to orientation of the 5753L.

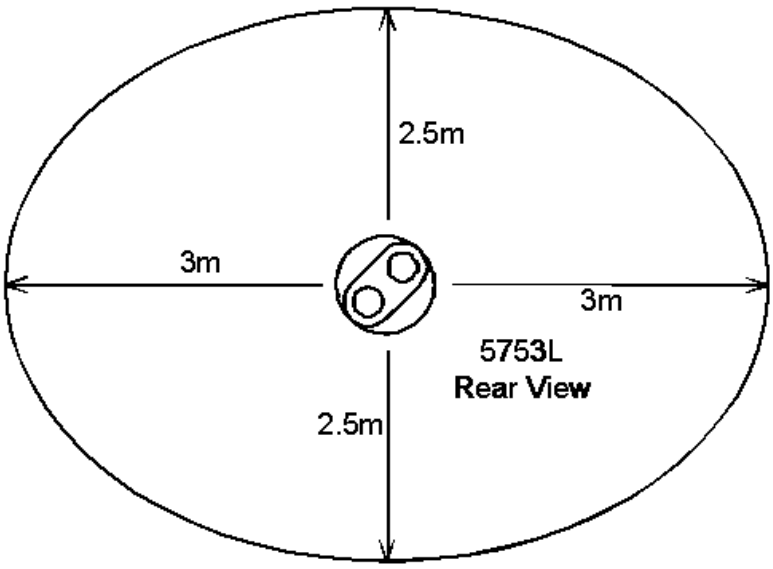

The absolute range of all PIR detectors is subject to variations caused by the type and quantity of clothing worn, as well as variable background temperature characteristics. Rapid and large temperature changes may be detected even if they appear to be well beyond the field of view of a Unit due to reflections off surfaces that *are* within the field of view.

3.2 Mounting Instructions

The 5753L is designed to flush mount on the ceiling, and is ideally suited to mounting on suspended ceiling tiles.

Cut a 50 mm circular hole in the ceiling (or ceiling tile), feed the attached cable and Sensor through the hole and secure in position with the locking ring.

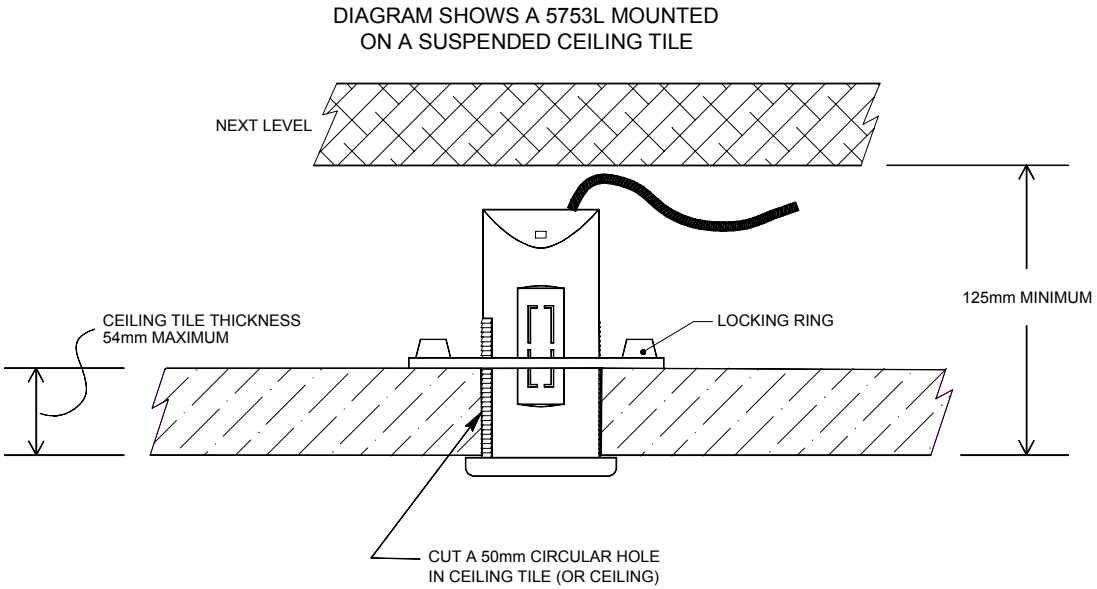

Special points to take note of are:

- The thickness of the ceiling (or ceiling tile) should not exceed 54mm.
- When mounting in suspended ceilings there should be at least 125mm between the lower surface of the tile and the hard surface above.
- If possible, adjust the light level sensitivity before permanently fixing the 5753L to the ceiling.

4.0 C-Bus Network Connection

Installation of the 5753L on the C-Bus Network requires connection to the unshielded twisted pair C-Bus cable.

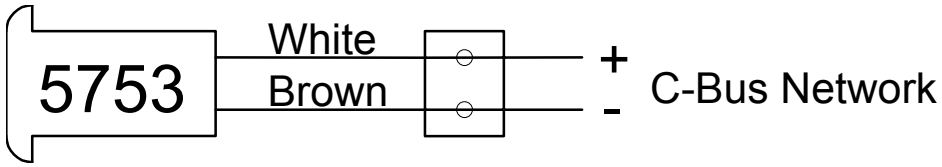

Connection should be made using Category 5 data cable, Clipsal catalogue number 5005C305B.

The following table identifies the connections required from the 5753L to the C-Bus Network using Category 5 cable.

5753L	C-Bus Connection	Cat 5 Cable Colour
	Remote ON*	Green/White
	Remote ON*	Green
Brown (-)	C-Bus Negative	Orange/White
	C-Bus Negative	Blue/White
White (+)	C-Bus Positive	Blue
	C-Bus Positive	Orange
	Remote OFF*	Brown/White
	Remote OFF*	Brown

* Note: The 5753L does not have Remote Override (On/Off) functions, however these connections must be maintained for correct operation of these services across the C-Bus Network.

The illustration below shows the recommended technique for cable termination. Note the mutual twist of solid and dotted conductors of opposing coloured wires. This ensures the best electrical termination and adequate shielding from external electrical noise.

5.0 C-Bus Power Requirements

The C-Bus 5753L PIR Occupancy Sensor draws 18 mA from the C-Bus Network. Adequate C-Bus Power Supply Units must be installed to support the connected devices. If in doubt, consult the C-Bus Calculator v2.0.0 (or higher) – Network Design Verification Software Utility.

6.0 Power Surges and Short Circuit Conditions

The mains voltage must be limited to the range specified for any C-Bus Unit which is mains powered. Each unit incorporates transient protection circuitry, however external surge protection devices should be used to enhance system immunity to power surges. It is strongly recommended that overvoltage equipment such as the Clipsal 970 is installed at the switchboard.

7.0 Megger Testing

Megger testing of an electrical installation that has C-Bus Units connected will not cause any damage to C-Bus Units. Since C-Bus Units contain electronic components, the installer should interpret megger readings with due regard to the nature of the circuit connection.

Megger testing must never be performed on the C-Bus data cabling or terminals as it may degrade the performance of the Network.

8.0 Programming and Commissioning

The 5753L must be programmed to set a unique identification (Unit Address) and mode of operation on the C-Bus Network. This can be achieved by utilizing the 5753L's *Learn Mode* capability or by using the C-Bus Installation Software V2.2.0 or higher.

8.1 Programming Using Learn Mode

When programming the Unit via its *Learn Mode* capability, the installer should first read the Clipsal "Quick start guide to programming C-Bus2 *Learn Units"* booklet. A more detailed treatment is available in the "C-Bus Learn Mode Operations and Programming Guide".

The actions listed below must be performed in conjunction with *Learn Mode* programming of output devices and may only be done when *Learn Mode* has been activated (refer to booklet for details).

Action 1	Using a screw driver, change the light level setting on the side of the Unit, standing so that you can see the Sensor window.	Result 1	The orange indicator behind the Sensor window will flash once.
Action 2	Wait for the indicator to double flash (after 5 seconds) then immediately (within 1 second) turn the light level adjustment back the other way.	Result 2	The orange indicator behind the Sensor window will come on and stay on. The Unit is now ready to Learn its time out. (Note: if the indicator stays off, go back to Action 1)
Action 3	Changing the setting again will cause the indicator to begin double flashes.	Result 3	Each double flash represents a 5 minute timer duration (so be quick with the screwdriver)
Action 4	Turn the light level adjustment back the other way.	Result 4	The indicator will single flash showing that the timer function has been set.
Action 5	Exit Learn Mode by pressing any toggle switch on a Relay or Dimmer Output Unit for 2 seconds.	Result 5	C-Bus2 will have *Learned* the relationship and return to normal operation.

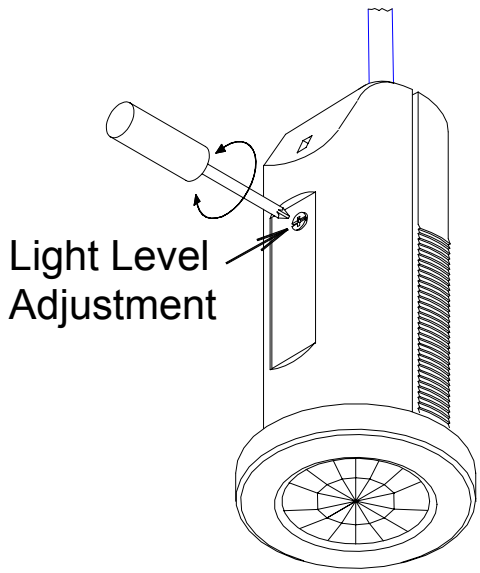

8.2 Setting Up To "Walk Test" The Detection Area

1.	Connect Unit to C-Bus Network and allow at least 2 minutes for the Unit to stabilize.
2.	Set the "light level sensor" adjustment fully anti-clockwise Note: Do not force the adjustment screw beyond its range of travel.
3.	Using the C-Bus installation Software, set up the Unit to control a load. Set the time out interval to 1 second.
4.	Walk slowly around the room, through doorways etc to confirm the load is activated from within the desired area.
5.	Using the C-Bus Installation Software or Learn Mode, set the time out interval to the desired duration.

8.3 Adjusting the Light Level Sensor

The light level sensor has to be adjusted to ensure that the sensor triggers the programmed load at the correct light level.

1.	Rotate clockwise to avoid activation of load when natural light is adequate.	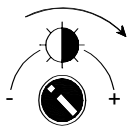
2.	To activate the load at dusk, set adjustment to this area.	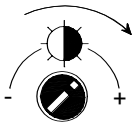
3.	To activate the load at night, set adjustment to this area.	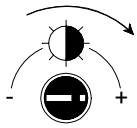
4.	To have the load activated day and night, set in this position	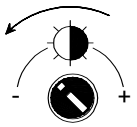

9.0 Important Warning

The use of any non C-Bus Software in conjunction with the hardware installation without the written consent of Clipsal Integrated Systems may void any warranties applicable to the hardware.

10.0 Troubleshooting Guide

Problem	Possible Cause	Possible Action
1. Lights turns on for no apparent reason	Momentary power failure	No action, Unit will reset after time out
	Unseen target	Check for animal (dogs cats etc)
	Extreme draughts of hot and cold air	Check doors, windows or air-conditioning outlets
2. Light turns on during daylight	Wrong setting on light adjustment	Reset according to commissioning instructions
3. Lights not on in dim or dark conditions	C-Bus installation incorrect	Refer C-Bus installation procedure manual
	See #2 above	Reset according to commissioning instructions
	Light globe "blown"	Replace light globe
4. Light remains on permanently	Unit not installed correctly	Refer to C-Bus installation procedure manual
	Moving infrared source being detected	Blank off viewing window; light should turn off after time out. If light still remains on, call installer
	Note: Do not mount next to objects which can change temperature rapidly e.g. air-conditioning vents, heater flues, moving water i.e. fountains, sprinklers	

11.0 Standards Complied

Standard/Directive	Title
AS/NZS 1044:1995; IEC/CISPR 14-1:1993; BS/EN 55014-1:1994	RFI Emissions Standard
AS/NZS6100-3-2:1998; IEC61000-3-2:1995; EN61000-3-2:1996	Electromagnetic Compatibility
IEC 60669-2-1:1995 EN 60669-2-1:1996	Particular Requirements - Electronic switches
C-Tick	Australian/New Zealand EMC Framework
89/336/EEC	EMC Directive

12.0 Limited Warranty

The Clipsal 5753L carries a two year warranty against manufacturing defects (refer to attached Warranty Statement).

13.0 Product Specifications

Electrical Specifications

Catalogue No.	5753L
Operating Voltage	15-36V DC
Operating Current	18mA
Operating Temperature	0° to 45°C
Warm Up Period	Up to 2 minutes for Sensor to stabilise
Rated Detection Field	Typically 5 metres x 6 metres diameter at 2.4 metres
Timer Delay Range	0 sec. to 18hrs:12min:15 sec. (Programmable down to 1 sec intervals via software or 5 min intervals via *Learn Mode*)
Light Level Inhibit Threshold	Continuous from 1 Lux to full sunlight
Mounting Surface	Ceiling
Mounting Height for Rated Detection Field	2.4 metres
Maximum Mounting Height	3 metres
Maximum Ceiling Thickness	54mm
Dimensions – Sensor housing	65mm (W) x 115mm (L)
Dimensions – locking ring	96mm (W) x 13mm (H)
Weight	45g

Mechanical Specifications

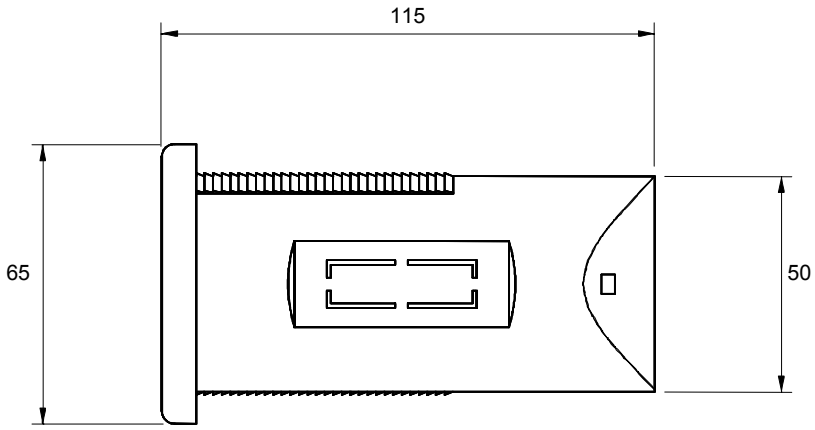

Side View

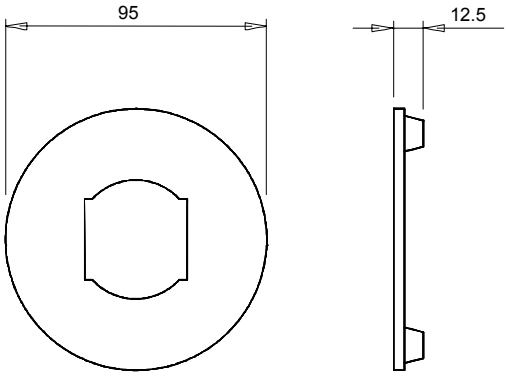

End View

All dimensions are in millimetres.
No user serviceable parts inside.

Further Information

For further information about programming and configuring C-Bus 360° PIR Occupancy Sensor Input Units, please consult the documentation supplied with the C-Bus Installation Software (Portable Document File [PDF] and requires Adobe Acrobat Reader v4.0 or higher to view or print):

- **C-Bus 360° PIR Occupancy Sensor Installation Instructions**
  The printed booklet you are reading now contains detailed information for the installer regarding Unit mounting, wiring, and C-Bus Network requirements. C-Bus 360° PIR Occupancy Sensor features and specifications are also presented.

- **C-Bus Learn Mode Operations and Programming Guide**
  The C-Bus Learn Mode Operations and Programming Guide presents a comprehensive guide to C-Bus Learn Mode and gives full details of this mode.

- **Technical Support and Troubleshooting**
  For further assistance in using C-Bus 360° PIR Occupancy Sensor, please consult your nearest Clipsal Integrated Systems Sales Representative or Technical Support Officer.

Technical Support Hotline	1 300 722 247 (Cost 25¢ a call, Australia Only)
Technical Support E-mail	techsupport.cis@clipsal.com.au
Sales Support Email	sales.cis@clipsal.com.au
Clipsal Integrated Systems Website	clipsal.com/cis

Products of Clipsal Integrated Systems Pty Ltd

ABN 15 089 444 931
Head Office
12 Park Terrace, Bowden
South Australia 5007

International Phone	+61 8 8269 0560
International Fax	+61 8 8346 0845
Internet	clipsal.com/cis
E-Mail	cis@clipsal.com.au

1036308